ORDER NO. VSD9907M904A
D20

Service Manual

Vol. 1

DVCPRO
DIGITAL VIDEO CASSETTE

Sec. 1 *Operating Instructions*
Sec. 2 *Service Information*
Sec. 3 *Maintenance & Mechanism Adjustments*
Sec. 4 *Electrical Adjustments*
Sec. 5 *Exploded Views & Replacement Parts Lists*

Digital Video Cassette Player
AJ-D440P/E

Digital Video Cassette Recorder
AJ-D450P/E

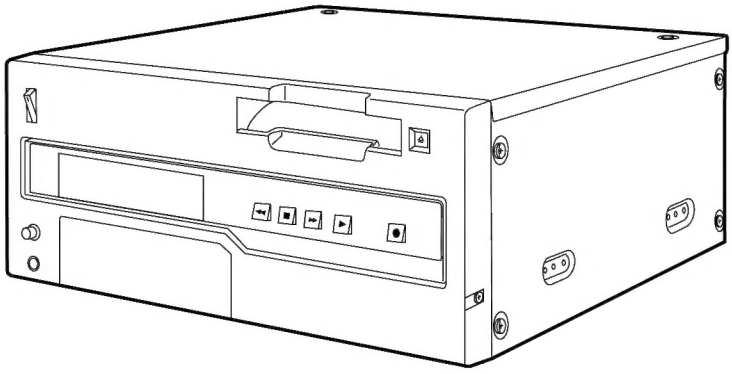

Please refer to the Service Manual Volume 2 (order No. VSD9907M904B) for Block Diagrams, Schematic Diagrams and Circuit Board Diagrams.

Panasonic®

© 1999 Matsushita Electric Industrial Co., Ltd. All rights reserved.
Unauthorized copying and distribution is a violation of law.

ORDER NO. VSD9907M904B
D20

Service Manual

Vol. 2

DVCPRO
DIGITAL VIDEO CASSETTE

Sec. 6 ***Block Diagrams***

Sec. 7 ***Schematic Diagrams***

Sec. 8 ***Circuit Board Diagrams***

Digital Video Cassette Player

AJ-D440P/E

Digital Video Cassette Recorder

AJ-D450P/E

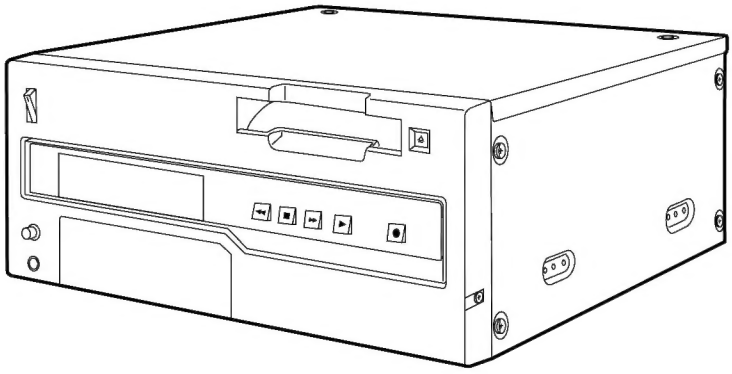

Please refer to the Service Manual Volume 1 (order No. VSD9907M904A) for Operating Instructions, Service Information, Maintenance & Mechanical Adjustments, Electrical Adjustments and Expoded Views & Replacement Parts List.

Panasonic®

© 1999 Matsushita Electric Industrial Co., Ltd. All rights reserved.
Unauthorized copying and distribution is a violation of law.